INVER GROVE HEIGHTS
Northwest Area

Chapter 4

Better Site Design Techniques

Northwest Area (NWA)
Inver Grove Heights Stormwater Manual

Better Site Design Techniques

Chapter 4

Key Topics:	how to plan and apply better site design practices at new development projects, techniques that reduce impervious cover, conserve natural areas, and use pervious areas to more effectively treat stormwater runoff

Contents

I. Introduction 3
II. Preserving Natural Areas 3
III. Disconnecting and Distributing Stormwater 7
IV. Reducing Impervious Cover in Site Design 9
V. The Benefits of Better Site Design 14
VI. Applying Better Site Design 15
VII. References 19

I. Introduction

This chapter provides an overview for designers of the Better Site Design (BSD) techniques and how to plan and apply them at new development sites. Better site design includes a series of techniques that reduce impervious cover, conserve natural areas, and use pervious areas to more effectively treat stormwater runoff (Center for Watershed Protection, 1998a) and promote the treatment train approach to runoff management. The goal of better site design is to reduce runoff volume and mitigate site impacts when decisions are being made about proposed layout of a development site. These techniques are known by many different names, such as low impact development, design with nature, sustainable development and conservation design.

When applied early in the design and layout process, better site design techniques can sharply reduce stormwater runoff and pollutants generated at a development site, and also reduce the size and cost of both the stormwater conveyance system and stormwater management practices (Center for Watershed Protection, 1998b).

More than a dozen different better site design techniques can be applied early in the design process at development sites. While not all of the better site design techniques will apply to every development site, the goal is to apply as many of them as possible to maximize stormwater reduction benefits, as shown below:

Preserving Natural Areas

- Natural Area Conservation
- Site Reforestation or Restoration
- Shoreline Buffers
- Open Space Design

Disconnecting and Distributing Runoff

- Soil Compost Amendments and/or Soil Tilling
- Disconnection of Impervious Surfaces
- Rooftop Disconnection
- Grass Channels
- Stormwater Landscaping

Reducing Impervious Cover in Site Design

- Narrower Streets
- Slimmer Sidewalks
- Smaller Cul-de-sacs
- Shorter Driveways
- Smaller Parking Lots

II. Preserving Natural Areas

From a stormwater standpoint, it is desirable to maintain as much natural vegetative cover such as forest, prairie or wetland as possible. Natural areas generate the least amount of stormwater runoff and pollutant loads and establish and maintain the desired pre-development hydrology for the site. One of the first steps in the site planning involves identifying, conserving and restoring natural areas present at the development site. The overall strategy is to maximize natural area conservation beyond what is required under local or state resource requirements. Normally, an inventory of natural areas is conducted at the site, along with

an assessment of potential areas for reforestation or restoration. Next, designers modify the layout of the development project to take advantage of natural features, preserve the most sensitive areas, and mitigate any stormwater impacts. Open space design is one of the most effective better site design techniques for preserving natural areas at residential sites without losing developable lots.

Natural Area Conservation

Natural area conservation protects natural resources and environmental features that help maintain the pre-development hydrology of a site by reducing runoff and promoting infiltration (Figure 4.1). Examples include any undisturbed vegetation preserved at the development site, such as forests, prairies, and riparian areas; ridge tops and steep slopes, and stream, wetland and shoreline buffers. Designers should also place a particular priority on preserving natural drainage pathways, intermittent and perennial streams, and floodplains and their associated wetlands. Buildings and roads should be located around the natural topography and drainage so as to avoid unnecessary disturbance of vegetation, soils and natural drainage ways.

Figure 4.1 Residential Subdivision Illustrating Preservation of Natural Areas

Source: Arendt, 1997

The undisturbed soils and vegetation of natural areas promote infiltration, runoff filtering and direct uptake of pollutants. Forested areas intercept rainfall in their canopy, reducing the amount of rain that reaches the ground. Vegetation also pumps water back into the atmosphere which increases storage available in the soil. Native vegetation also prevents erosion by stabilizing soil, filtering sediment and pollutants from runoff, and nutrient uptake. Preserving natural areas creates many economic benefits including decreased heating and cooling costs, higher property values and improved habitat (Cappiella, 2005). Generally a natural grassland area would have to be five acres or larger to approach *full* ecological function, and a forested site would have to be in the range of 20-40 acres (DNR written correspondence, 2005).

Consult the Natural Resource Inventory and Management Plan for the Northwest Expansion Area (2004) for initial direction in determination of potential preservation areas.

Site Reforestation or Restoration

Site reforestation involves planting trees on existing turf or barren ground at a development site with the goal of establishing a mature forest canopy that can intercept rainfall, maximize infiltration and increase evapotranspiration (Figure 4.2).

Figure 4.2 Potential Planting Areas at a Development Site

Source: Cappiella et. al. 2005

Reforestation is accomplished through active replanting or natural regeneration of forest cover. Cappiella (2005) reviewed a range of research that demonstrated the runoff reduction benefits associated with forest cover compared to turf cover. The benefits include reduced annual runoff volumes, higher rates of infiltration, reduced soil erosion, and greater uptake removal of stormwater pollutants. Forest soils actively promote greater infiltration rates due to surface organic matter and macro pores created by tree roots. Forests also intercept rainfall in their canopy, reducing the amount of rain that reaches the ground and increasing potential water storage in forest environments.

Shoreline Buffers

Many communities require buffers at development sites to provide a vegetative setback between development and streams, lakes or wetlands. While there are no streams, per se, in the NWA, grassed channels and stormwater conveyance routes can be managed as such to realize buffer benefits. The portions of a site reserved for buffers can present an excellent opportunity to practice better site design. The primary function of buffers is to physically protect a water course, lake or wetland from future disturbance or encroachment; however, with careful design they can also be used to capture and filter stormwater runoff from upland areas of the site. To optimize stormwater treatment, the outer boundary of the buffer (Figure 4.3) should have a

Figure 4.3 Three-Zone Stream Buffer System

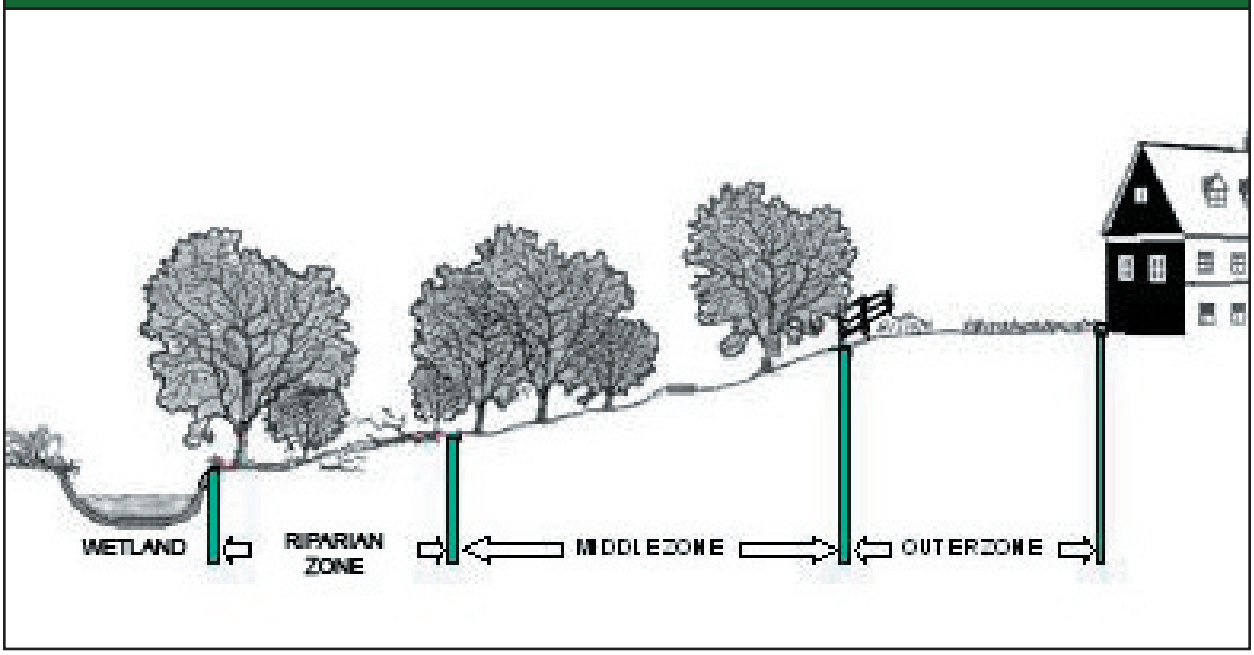

Source: Adapted from Schueler, 1995

stormwater depression area and a grass filter strip. Runoff captured within the stormwater depression is spread across a grass filter designed for sheet flow conditions, and discharges to a wider forest or shrub buffer in the middle or riparian zones that can fully infiltrate and/or further treat storm flows.

Buffers can provide many different environmental and economic benefits, including:

- Reduced small drainage problems and complaints
- Reduced risk of flood damage
- Reduced shoreline erosion
- Increased adjacent property values
- Enhanced pollutant removal
- Locations for greenways and trails
- Sustained integrity of ecosystems and habitat
- Protection of wetlands associated with the corridor
- Prevention of disturbance of steep slopes
- Mitigation of thermal impacts
- Protection of habitat for wildlife

Open Space Design

Open space design is a form of residential development that concentrates lots in a compact area of the site to allow for greater conservation of natural areas (Figure 4.4). Minimum lot sizes, setbacks and frontage distances are relaxed so as to maintain the same number of dwelling units at the site. This form of development may also be called cluster design or conservation design. Since open space design is available as an option under local zoning codes, it can be an excellent tool to conserve more natural areas beyond the minimum required under local and state water resource protection ordinances. Open

Figure 4.4 Conventional Subdivision (left) with 72 Lots, and Alternative Layout (center) Using Open Space Design with the same number of Lots, and Another Alternative Layout (right) Using Open Space Design with 66 Lots

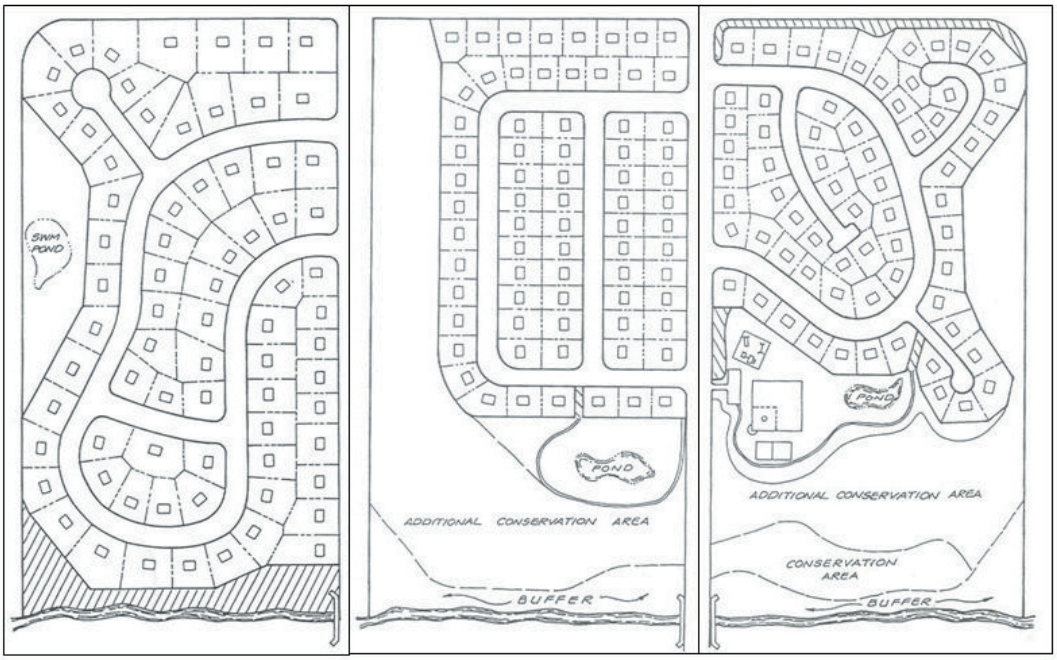

Source: Schueler, 1995

space design can also be used to reduce or disconnect impervious cover and provide for greater on-site stormwater treatment. The natural areas conserved are protected by easement and managed by a community or homeowners association.

Research has shown that open space designs can reduce overall site impervious cover compared to conventional subdivisions, and command higher prices and more rapid sales, as well (Zielinski, 2001). Other benefits include lower costs for grading, erosion control, stormwater and site infrastructure, as well as greater land conservation, without the loss of developable lots.

III. Disconnecting and Distributing Stormwater

Another Better Site Design strategy seeks to maximize the use of pervious areas at the site to help filter and infiltrate runoff generated from impervious areas and to spread excess runoff over pervious areas. Most development sites have extensive areas of grass or landscaping where runoff can be treated close to the source where it is generated. Designers should carefully look at the site for pervious areas that might be, used to disconnect or distribute runoff. The benefits of this strategy include systematic reductions in runoff volumes, reductions in runoff velocities that can lead to flooding and improved water quality by filtering.

Compost and Amended Soils

Compost amended soils are used to recover soil porosity lost due to compaction as a result of past construction, soil disturbance and ongoing human traffic. The amendment process seeks to recover the porosity and bulk density of soils by incorporating soil amendments or conditioners into the lawn, such as compost, top soil, lime and gypsum (McDonald, 1999).

Soils can also be amended through the addition of fibers for structural support to prevent compaction, as well as the simple addition of sand to improve permeability or organic material other than compost (e.g. peat).

Soils are the foundation for successful planting, and the water holding capacity of soils can significantly reduce the volume of runoff from a site. What constitutes a “good” soil depends on the purpose it is to serve. For example, if you are planting prairie plants a high organic content in the soil is required. However, if you are planting Kentucky Bluegrass a lower organic content soil can be used.

In addition to successful plant growth, soils can be engineered to improve water holding capacity. The humus materials or compost created from the compost process has a water holding capacity of up to 80 percent by weight. This quality is very significant when trying to decrease runoff and increase filtration. Higher organic content in the soil also improves the filtering and binding capacity of soils for capturing pollutants.

On-site soils can be amended by incorporating compost into the soils or by laying a one to three inch “blanket” of compost on top of the soils. Fiber amendments can assist in maintaining soil structure even with heavy surface loads. The method chosen depends on site characteristics and the purpose it is intended to serve, such as promoting infiltration or reducing nutrient and sediment loading to surface waters.

Disconnection of Surface Impervious Cover

Surface disconnection spreads runoff from small parking lots, courtyards, driveways and sidewalks into adjacent pervious areas where it is filtered or infiltrated into the soil. Designers look for areas of the site where flow can be diverted onto turf, lawns or a vegetated filter strip. When many small areas of impervious cover are disconnected from the storm drain system, the total volume and rate of stormwater runoff can be sharply reduced. Disconnections may be restricted based on the length, slope, and soil infiltration rate of the pervious area in order to prevent any reconnection of runoff with the storm drain system. In some cases, minor grading of the site may be needed to promote overland flow and vegetative filtering.

Rooftop Disconnection

Disconnection of rooftops offers an excellent opportunity to spread runoff over lawns and other pervious areas where it can be filtered and infiltrated. Downspout disconnection can infiltrate runoff, reduce runoff velocity, and remove pollutants. Alternately, downspouts can be directed to a dry well, rain garden or surface depression. The stormwater benefits associated with rooftop disconnection can be significant, particularly when residential lot size is large and soils are relatively permeable. Note that building sub-drains generally intercept water from entering a building and do not lend themselves to the impervious disconnection category.

Grass Channels

Curbs, gutters and storm drains are all designed to be hydraulically efficient in removing stormwater from a site. However, they also increase peak runoff discharge, flow velocity, and pollutant delivery to downstream waters. From a better site design perspective, grass channels are preferable to curb and gutters as a conveyance system, where development density, topography, soils and slopes permit their use. Grass channels provide on-site runoff storage, lower peak flows, reduce runoff velocities, and filter or infiltrate some portion of storm flows. While research has indicated that grass channels cannot remove pollutants reliably enough to qualify as a BMP (Winer, 2000), they have been shown to reduce runoff volumes during smaller storms when compared to curbs and gutters.

Stormwater Landscaping

Traditionally, landscaping and stormwater management have been treated separately in site planning. In recent years, engineers and landscape architects have discovered that integrating stormwater into landscaping features can improve the function and quality of both. The basic concept is to adjust the

planting area to accept stormwater runoff from adjacent impervious areas and utilize plant species adapted to the modified runoff regime (Table 4.1). Excellent guidance on how to match plant species to stormwater conditions can be found in the MPCA publication *Plants for Stormwater Design: Species Selection for the Upper Midwest* (Shaw and Schmidt, 2003) and in Cappiella *et al.* (2005).

Table 4.1 Environmental Factors to Consider When Integrating Stormwater and Landscaping

Factor	Problem Addressed
Duration and depth of inundation	Increased duration and depth of water changes the physical and chemical environment in ways that may favor Invasive plants
Frequency of inundation	Increased frequency of inundation can carry increased levels of pollutants and toxins
Available moisture during dry weather	Soil compaction can affect plant species success at a site and also the ability of the soil to infiltrate stormwater efficiently
Sediment loading	Susceptibility to erosion and sedimentation from stormwater affects placement of stormwater management BMP as well as selection of plant material
Salt exposure	Browsers (deer and beaver) may be attracted by increased levels of salt in areas that treat roadway and parking lot runoff
Nutrient loading	Increased slopes increase ability to transport nutrients in stormwater

Source: Adapted from Shaw and Schmidt, 2003

A landscaping area may provide full or partial stormwater treatment, depending on site conditions. An excellent example of the use of landscaping for full stormwater treatment is bioretention (Figure 4.5). In other cases, landscaping can provide supplemental treatment such as green rooftops and stormwater planters. Even small areas of impervious cover should be directed into landscaping areas since stormwater or melt water help to reduce irrigation needs. More specific recommendations on the use of landscaping in BMP design can be found in Chapter 8 and Appendix B.

IV. Reducing Impervious Cover in Site Design

This strategy relies on several techniques to reduce the total area of rooftops, parking lots, streets, sidewalks and other types of impervious cover created at a development site. The basic approach is to reduce each type of impervious cover by downsizing the required minimum geometry specified in current local codes, keeping in mind that there are minimum requirements that must be met for fire, snowplow and school bus operation. Less impervious cover directly translates into less stormwater runoff and pollutant loads generated at the site.

Figure 4.5 Examples of the Use of Landscaped Islands for Stormwater Treatment in a Suburban Parking Lot (left), the Parking Lot of a Government Office Building (top right), and a Highly Urban parking Lot (bottom right).

Source: Minnesota Stormwater Manual, 2005

Narrower Streets

Many communities require residential streets that are much wider than needed to support travel lanes, on-street parking, and emergency access. Some communities currently require residential streets as wide as 32 to 40 feet and which provide two parking lanes and two moving lanes (Figure 4.6). Local experience has shown that residential streets can have pavement widths as narrow as 22 to 26 feet, and still accommodate all access and parking needs (ITE, 1997). Even narrower access streets or shared driveways can be used when only a handful of homes are served. Narrower streets help reduce impervious cover and associated runoff and pollutant generation.

Significant cost savings occur in both road construction and maintenance. Narrower streets also help reduce traffic speeds in residential neighborhoods which, in turn, improve pedestrian safety. Snow stockpiles on narrow streets can be accommodated if parking is restricted to one side of the street or alternated between the sides. Alternatively, the right-of-way may be used for snow storage. Narrow snowplows are available. Snowplows with 8' width, mounted on a pick-up truck are common. Some companies manufacture alternative plows on small bobcat-type machines.

Slimmer Sidewalks

Many communities require sidewalks that are excessively wide or are located adjacent to the street where the pedestrians are at risk from vehicles. A better site design technique modifies the width and location of sidewalks to promote safer pedestrian mobility (Figure 4.7). Impervious cover is reduced when sidewalks are required on only one side of the street, reduced in width and are located away from the street. Sidewalks can also be disconnected so they drain to lawns or landscaping instead of the gutter and storm drain

Figure 4.6 Example of a Traditional Road Design (left) and a Road that was Narrowed Through the Use of "Queuing" lanes (right)

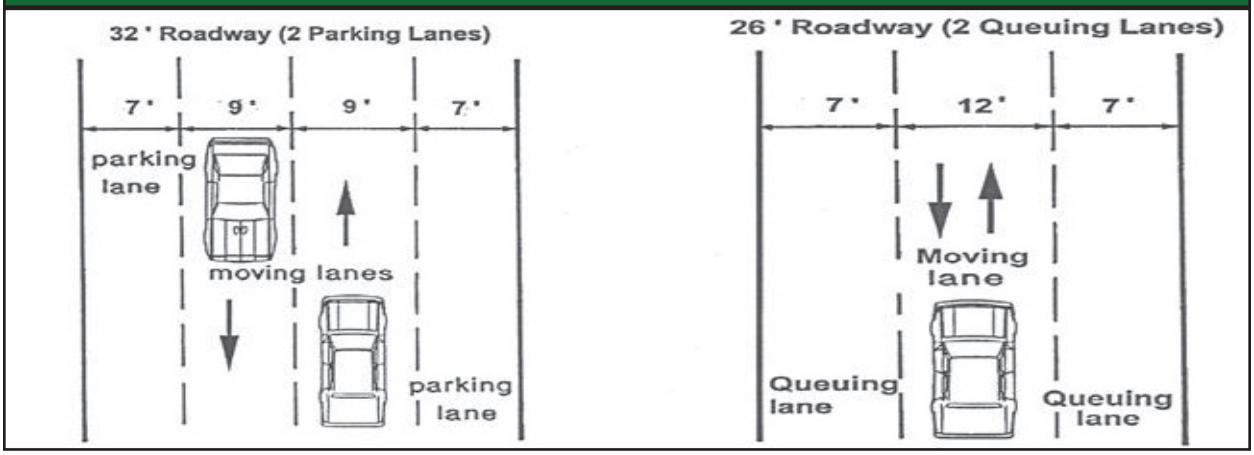

Source: Minnesota Stormwater Manual, 2005

Figure 4.7 Sidewalk that Drains to Adjacent Vegetation and Provides Common Walkways Linking Pedestrian Areas

Source: Minnesota Stormwater Manual, 2005

system. Slimmer sidewalks reduce and/or disconnect impervious cover and thus reduce the generation of runoff. Other benefits include greater pedestrian safety, lower construction and maintenance costs, and reduced individual homeowner responsibility for snow clearance.

Smaller Cul-de-Sacs

The large cul-de-sacs that enable vehicles to turn around at the end of a residential street provide a great opportunity for better site design. Impervious cover can be reduced by minimizing the diameter of residential street cul-de-sacs and/or incorporating landscaped islands. Many communities require cul-de-sacs that have a greater diameter than needed to allow emergency and large vehicles to adequately turn around. Alternatives to the traditional 80 foot diameter cul-de-sac include 60 foot diameter cul-de-sacs, hammerhead turnarounds and loop roads (Figure 4.8).

Figure 4.8 Turnaround Options for Residential Streets

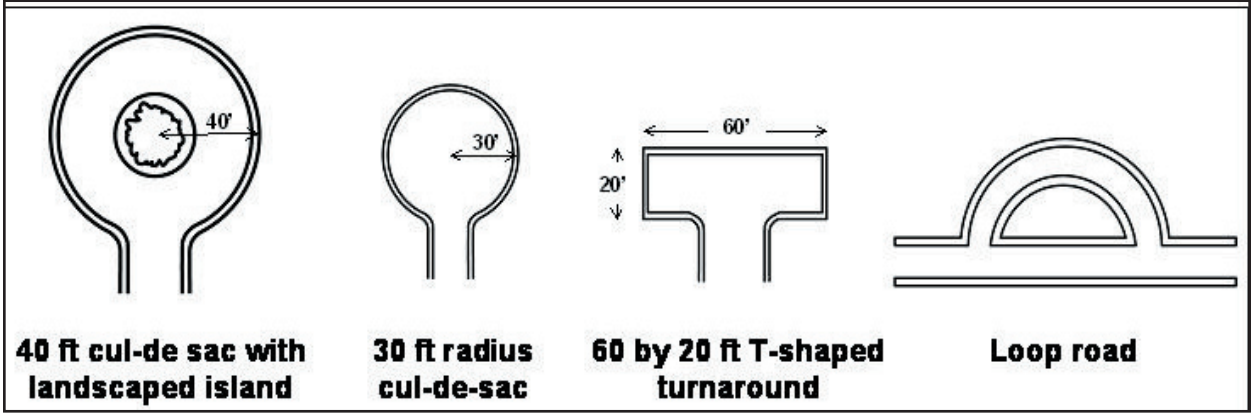

Source: Adapted from Schueler, 1995

In addition, the inside of the turnaround can be landscaped as a bioretention area to further reduce impervious cover and improve stormwater treatment. Trees and vegetation planted in landscaped islands can be used to intercept rain water and treat stormwater runoff from surrounding pavement (Figure 4.9). Each of these alternative turnaround options produces a more attractive and safe environment for residents.

Figure 4.9 Trees and Vegetation Planted in the Landscaped Island of a Cul-de-sac (left) and a Loop Road (right)

Source: Minnesota Stormwater Manual, 2005

Smaller Parking Lots

The parking lot is an excellent place to apply better site design. In many communities, parking lots are over-sized and under-designed. Local parking and landscaping codes can be modified to allow the following better site design techniques to be applied within parking lots:

- Minimize standard stall dimensions for regular spaces
- Provide compact car spaces
- Use of pervious pavement (asphalt, concrete, pavers, sand amendments)
- Incorporate efficient parking lanes
- Reduce minimum parking demand ratios for certain land uses
- Treat the parking demand ratio as a maximum limit
- Create stormwater "islands" in traffic islands or landscaping areas to treat runoff using bioretention, filter strips or other practices
- Encourage shared parking arrangements
- Proof of Parking

Smaller parking lots can sharply reduce impervious cover and provide more effective treatment of stormwater pollutants. In addition, smaller parking lots reduce both up front construction costs and long term operation and maintenance costs, as well as the size and cost of stormwater practices. Parking lot landscaping makes the lot more attractive to customers, and promotes safety for both vehicles and pedestrians. In addition, trees and other landscaping help screen adjacent land uses, shade people and cars, reduce summertime temperatures and improve air quality and bird habitat.

Shorter Driveways

Driveways present another opportunity to practice better site design. Most local codes contain front yard setback requirements that dictate driveway length. In many communities, front yard setbacks for certain residential zoning categories may extend 50 or 100 feet or even longer, which increases driveway length well beyond what is needed for adequate parking and access to the garage. Shorter setbacks (20 feet are allowed in the NWA) reducing the length and impervious cover for individual driveways. In addition, driveway width can be reduced, and more permeable driveway surfaces allowed. Another way to reduce

Figure 4.10 Example of a Shorter Driveway (left) and a Shared Driveway (right)

Source: Minnesota Stormwater Manual, 2005

impervious cover is to allow shared driveways that provide street access for up to six homes (Figure 4.10). Shorter driveways help reduce infrastructure costs for developers since they reduce the amount of paving or concrete needed.

V. The Benefits of Better Site Design

Several researchers have employed redesign comparisons to demonstrate the benefits of better site design over a wide range of residential lot sizes and commercial applications. For example, Center for Watershed Protection (1998b) demonstrated that better site design techniques could reduce impervious cover and stormwater runoff by 7 to 70%, depending on site conditions. Figure 4.11 illustrates a redesign analysis for

Figure 4.11 Comparative Analysis of Stonehill Estates in the Pre-Development Condition, Conventional Design, and Open Space Design

Source: Center for Watershed Protection, 1998

a medium density residential subdivision. The analysis suggested that better site design techniques could reduce impervious cover and annual runoff volume by 24%, cut phosphorus loadings by half, and increase site infiltration by 55%, compared to a traditional subdivision.

Each better site design technique provides environmental and economic benefits to both the developer and the community at large. When techniques are applied together at a development site, they can result in tangible savings for the developer in the form of:

- Reduced infrastructure costs (e.g., paving and piping)
- Reduced clearing and grading costs during construction
- Smaller and less costly structural stormwater BMPs
- Faster sales and lease rates
- Easier compliance with wetland and other resource protection regulations
- More land available for building since fewer structural BMPs are needed

Cost savings really start to add up when many better site design techniques are applied together. Some research indicates that infrastructure savings alone can range from 5 to 65%, depending on site conditions, lot size and the extent that better site design techniques are applied (Cappiella *et al,* 2005; Center for Watershed Protection, 1998b; Liptan and Brown, 1996; Dreher and Price, 1994; and Maurer, 1996).

Better site design techniques continue to provide benefits to the community long after the developer has sold the lots. Some examples of these benefits include:

- Reduced operation and maintenance costs for roads and stormwater system
- Increased property values for homes and businesses
- Increased open space available for recreation
- More pedestrian friendly neighborhoods
- Reduced annual cost for mowing
- More pleasing and attractive landscaping
- Improved air quality (more forest cover)
- Less temperature fluctuation from paved surfaces

Table 4.2 compares the economic and environmental benefits that can be expected for individual better site design techniques.

VI. Applying Better Site Design in the NWA

Typically the application of better site design techniques is difficult because local subdivision codes and zoning ordinances discourage or even prohibit their use. This is not the case however in the Northwest Area of the City of Inver Grove Heights. The Northwest Area Planned Unit Development Overlay District (Zoning Ordinance Subd. 39) contains significant flexibility and language requiring the use of better site design techniques intended to promote the conservation of natural areas and reduce the generation of stormwater runoff.

Table 4.3 identifies the PUD language that corresponds to each of the better site design techniques presented in this Chapter of the Manual.

Table 4.2 Comparison of Benefits Provided by Better Site Design Techniques*

Better Site Design Technique	Minimizes Land Disturbance	Preserves Vegetation & Habitat	Lowers Capital Costs	Lowers O&M** Costs	Raises Property Value
Natural Area Conservation	●	●	●	●	◐
Site Reforestation	◐	●	○	●	●
Stream and Shoreline Buffers	●	●	●	●	◐
Open Space Design	●	●	●	●	◐
Soil Compost Amendments	◐	●	○	◐	○
Surface IC Disconnection	◐	◐	●	◐	○
Rooftop Disconnection	◐	◐	●	●	◐
Grass Channels	◐	◐	●	◐	◐
Stormwater Landscaping	◐	●	○	◐	●
Narrower Streets	●	◐	●	●	◐
Slimmer Sidewalks	◐	◐	●	●	◐
Smaller Cul-de-sacs	◐	◐	●	●	◐
Shorter Driveways	●	◐	●	●	◐
Smaller Parking Lots	◐	◐	●	●	◐

Key:

● = often provides indicated benefit

◐ = sometimes provides a modest benefit

○ = does not provide benefit

*Comparison is intended for general purposes; and will vary on a site-by-site basis.
**O&M = Operation and Maintenance

Source: Minnesota Stormwater Manual, 2005

Table 4.3 Better Site Design Techniques Identified in Zoning Ordinance Subd. 39	
Better Site Design Techniques	**Better Site Design Techniques Identified in PUD or other Regulatory Document**
Preserving Natural Areas	
Natural Area Conservation	An amount of land equal to at least 20% of the net developable area within the PUD shall be preserved as additional natural area/open space, which may include greenways as shown in the Inver Grove Heights Natural Resources Inventory and Management Plan (BRAA, 2004) (Subd. 39 G.4.a)
Open Space Design	Promotes open space design or cluster development by allowing an increased mixture of housing types for each zoning district (Subd. 39 G.5.a)
Shoreline Buffers	The wetland management standards assign slope-dependent buffer widths to each wetland management classification
Disconnecting and Distributing Runoff	
Soil Compost Amendments or Tilling	Identified in the Inver Grove Heights Stormwater Manual as a best management practice that may be used to meet the volume control standard.
Disconnection of Surface Impervious Cover	▶ Parking lot curbs shall be designed to meet the standards set forth in the City of Inver Grove Heights Stormwater Manual so as to insure safety and best management of stormwater. Generally curbs shall either be flat or have breaks at regular intervals to convey runoff into the stormwater system unless a stormwater management plan demonstrates that another curbing system meets the stormwater management performance objectives (Subd. 39 H.2.d) ▶ Surface parking lots in excess of 100 spaces shall provide landscaped islands between double loaded rows of parking. Such landscaped islands shall also serve as a stormwater cell and shall be designed according to the guidelines established in the City of Inver Grove Heights Stormwater Manual (Subd. 39 H.2.j) ▶ Cul-de-sacs can be designed with larger diameters provided a landscaped island is included and designed for stormwater storage. Landscaped medians are encouraged to be designed in cul-de-sac bulbs to handle stormwater runoff and provide a place for snow storage during snow season. (Subd. 39 I.1.e)
Rooftop Disconnection	▶ All residential downspouts and sump pumps shall discharge to cisterns and/or permeable surfaces (Subd. 39 H.4.a) ▶ All non-residential downspouts and sump pumps shall discharge to permeable surfaces if reasonably possible (Subd. 39 H.4.b)

Table 4.3 Better Site Design Techniques Identified in Zoning Ordinance Subd. 39	
Better Site Design Techniques	**Better Site Design Techniques Identified in PUD or other Regulatory Document**
Grass Channels	Parking lot curbs shall be designed to meet the standards set forth in the City of Inver Grove Heights Stormwater Manual so as to insure safety and best management of stormwater. Generally curbs shall either be flat or have breaks at regular intervals to convey runoff into the stormwater system unless a stormwater management plan demonstrates that another curbing system meets the stormwater management performance objectives (Subd. 39 H.2.d)
Stormwater Landscaping	…the use of natural plant materials for landscaping is encouraged in common areas (Subd. 39 H.1)
Reducing Impervious Cover in Site Design	
Narrower Streets	▶ Local public streets shall have a 28 foot paved width in addition to a sidewalk or trail on one side of the street. This street dimension shall restrict parking to only one side of the street (Subd. 39 I.1.c(ii)) ▶ Local private streets with a 24 foot width shall be acceptable with no parking on either side (Subd. 39 I.1.c(iii))
Smaller Cul-de-sacs	▶ Designed with a turn-around having an outside roadway radius of 35 feet and a street property line (ROW) radius of 50 feet (Subd. 39 I.1.e)
Shorter Driveways	▶ Driveway widths for single-family detached residential dwellings, two family and twin home dwellings shall be no more than 20 feet. In all other cases it shall be no more than 32 feet (Subd. 39 H.3.a) ▶ Shared driveways are encouraged… (Subd. 39 H.3.b) ▶ PUD identifies minimum and maximum front yard setbacks for various land uses (Subd. 39 G.3.b)
Smaller Parking Lots	▶ Joint parking arrangements encouraged in the Northwest Area Overlay District (Subd. 39 H.2.a) ▶ The PUD re-establishes the minimum required off-street parking spaces and established a minimum allowed number of parking spaces as well (Subd. 39 H.2.e) ▶ 50% of total parking required for Multi-Family and Mixed Use development shall be underground parking, tuck-under parking or structured parking within or under the principal structure. The intent of this regulation is to minimize impervious surface that would result from surface parking lots (Subd. 39 H. 2. f)

Table 4.3 Better Site Design Techniques Identified in Zoning Ordinance Subd. 39	
Better Site Design Techniques	**Better Site Design Techniques Identified in PUD or other Regulatory Document**
Pervious Surfaces	▶ Parking surfaces may be made of pervious materials such as pavers, pervious asphalt or concrete or other technology as identified in the Stormwater Manual (Subd. 39 H.2.c) ▶ Pervious paving materials shall/may be used for that portion of parking over the minimum required off-street parking spaces (Subd. 39 H.2.g) ▶ Single-family residential driveways are encouraged to be constructed of pervious materials such as pavers, pervious concrete or pervious asphalt (Subd. 39 H.3.c) ▶ Where additional hard surface is desired such as an additional parking space near the garage or where a turn around/guest parking space is desired it must be of permanent pervious surface such as brick pavers, pervious concrete/asphalt or other technique as approved through the City of Inver Grove Heights Stormwater Manual (Subd. 39 H.3.a)

VII. References

Arendt, R. 1997. Designing Open Space Subdivisions. Natural Lands Trust. Media, PA

Cappiella, K. 2005a. Urban Watershed Forestry Manual Part 1: Conserving Trees at the Watershed Scale. Prepared for: USDA Forest Service. Center for Watershed Protection. Ellicott City, MD.

Cappiella, K., T. Schueler, and T. Wright. 2005b. Urban Watershed Forestry Manual Part 2: Conserving and Planting Trees at Development Sites. Prepared for: USDA Forest Service. Center for Watershed Protection. Ellicott City, MD.

Center for Watershed Protection (CWP). 1998a. Better Site Design: A Handbook for Changing Development Rules in Your Community. Center for Watershed Protection. Ellicott City, MD.

Center for Watershed Protection (CWP). 1998b. Nutrient Loading From Conventional and Innovative Site Development. Prepared for: Chesapeake Research Consortium. Center for Watershed Protection. Ellicott City, MD.

Chicago Wilderness and Northeastern Illinois Planning Commission, 2003. Conservation Design Resource Manual. Available at http://www.chicagowilderness.org/

County Board of Supervisors of the County of Dane. 2005. Chapter 14 of the Dane County Code of Ordinances Regarding Erosion Control and Stormwater Management. Dane County, WI.

Delaware Department of Natural Resources and Environmental Conservation (DE DNREC). 1997. Conservation Design for Stormwater Management. Dover, DE.

Dreher, D, and T. Price. 1994. Reducing the Impact of Urban Runoff: The Advantages of Alternative Site Design Approaches. Northeastern Illinois Planning Commission. Chicago, IL.

Illinois Conservation Foundation and Chicago Wilderness, 2005. Changing Cost Perceptions: An Analysis of Conservation Development. Prepared by the Conservation Research Institute. http://www.nipc.org/environment/sustainable/conservationdesign/cost_analysis/

Institute of Transportation Engineers Transportation Planning Council Committee 5P-8 (ITE). 1997. Traditional Neighborhood Development Street Design Guidelines. Institute of Transportation Engineers. Washington, DC.

King County Department of Development and Environmental Services. 2005. Achieving the Post-Construction Soil Standard. King County, Washington.

Liptan, T. and C. Brown. 1996. A Cost Comparison of Conventional and Water Quality-based Stormwater Designs. City of Portland. Portland OR.

Maurer, G. 1996. A Better Way to Grow: For More Livable Communities and a Healthier Chesapeake Bay. Chesapeake Bay Foundation. Annapolis, MD.

McDonald, F. 1999. Ecologically Sound Lawn Care for the Pacific Northwest: Findings from the Scientific Literature and Recommendations from Turf Professionals. City of Seattle Public Works. Seattle, WA.

Metropolitan Council. 2001. Urban Small Sites Best Management Practice Manual. St. Paul, MN.

Minnesota Department of Natural Resources. 2003. Field Guide to the Native Plant Communities of Minnesota: The Laurentian Mixed Forest Province. Ecological Land Classification Program, Minnesota County Biological Survey, and Natural Heritage and Nongame Research Program, MNDNR St. Paul, MN.

Minnesota Department of Natural Resources. 2005. Field Guide to the Native Plant Communities of Minnesota: The Eastern Broadleaf Forest Province. Ecological Land Classification Program, Minnesota County Biological Survey, and Natural Heritage and Nongame Research Program, MNDNR St. Paul, MN.

Minnesota Department of Natural Resources. 2006. Field Guide to the Native Plant Communities of Minnesota: The Prairie Parkland and Tallgrass Aspen Parklands Province. Ecological Land Classification Program, Minnesota County Biological Survey, and Natural Heritage and Nongame Research Program, MNDNR St. Paul, MN.

Minnesota Pollution Control Agency. 2000. Protecting Water Quality in Urban Areas: Best Management Practices for Dealing with Storm Water Runoff from Urban, Suburban, and Developing Areas of Minnesota. St. Paul, MN.

Schueler, T. 1995. Site Planning for Urban Stream Protection. Center for Watershed Protection. Ellicott City, MD

Shaw, D. and R. Schmidt, 2003. Plants for Stormwater Design - Species Selection for the Upper Midwest. Edited by S. Brungardt, Designed by R. Harrison, Minnesota Pollution Control Agency, St. Paul, MN.

Winer, R. 2000. National Pollutant Removal Performance Database for Stormwater Treatment Practices, 2nd Edition. Prepared for: U.S. EPA Office of Science and Technology. Center for Watershed Protection. Ellicott City, MD.

Zielinski, J., 2001. The Benefits of Better Site Design in Residential Subdivisions. Watershed Protection Techniques, 3(2):633-646. Center for Watershed Protection. Ellicott City, MD.